Standart Seri
Standard Series
62

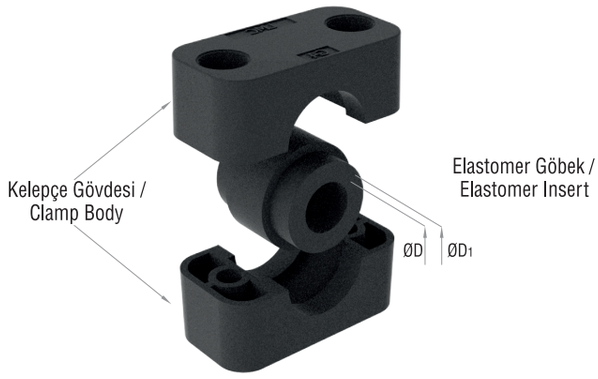

Ağır Seri
Heavy Series
63

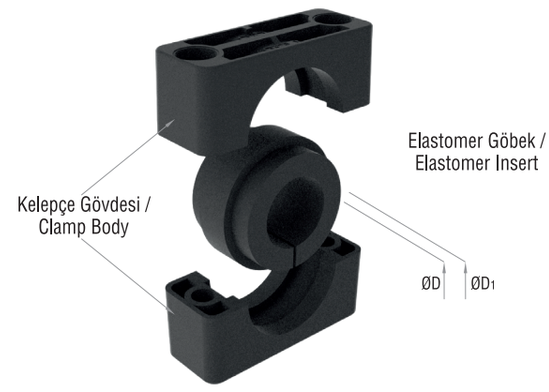

Grup / Group	Çap / Diameter ØD mm	ØD1 mm	Sipariş Kodu / Order Code: Kelepçe Gövdesi / Clamp Body	Gövde + Elastomer / Body + Elastomer
G4	6	25.5	C2P4HG4000.0	CDaaT00P4HG4006.0
	6.4			CDaaT00P4HG4006.4
	8			CDaaT00P4HG4008.0
	9.5			CDaaT00P4HG4009.5
	10			CDaaT00P4HG4010.0
	12			CDaaT00P4HG4012.0
	12.7			CDaaT00P4HG4012.7
	13.5			CDaaT00P4HG4013.5
	14			CDaaT00P4HG4014.0
	15			CDaaT00P4HG4015.0
	16			CDaaT00P4HG4016.0
	17.2			CDaaT00P4HG4017.2
	18			CDaaT00P4HG4018.0
	19			CDaaT00P4HG4019.0
G6	20	39	C2P4HG6000.0	CDaaT00P4HG6020.0
	21.3			CDaaT00P4HG6021.3
	22			CDaaT00P4HG6022.0
	23			CDaaT00P4HG6023.0
	25			CDaaT00P4HG6025.0
	25.4			CDaaT00P4HG6025.4
	26.9			CDaaT00P4HG6026.9
	28			CDaaT00P4HG6028.0
	30			CDaaT00P4HG6030.0
	32			CDaaT00P4HG6032.0

Grup / Group	Çap / Diameter ØD mm	ØD1 mm	Sipariş Kodu / Order Code: Kelepçe Gövdesi / Clamp Body	Gövde + Elastomer / Body + Elastomer
A2	6	25.5	C2P4HA2000.0	CDaaT00P4HA2006.0
	6.4			CDaaT00P4HA2006.4
	8			CDaaT00P4HA2008.0
	9.5			CDaaT00P4HA2009.5
	10			CDaaT00P4HA2010.0
	12			CDaaT00P4HA2012.0
	12.7			CDaaT00P4HA2012.7
	13.5			CDaaT00P4HA2013.5
	14			CDaaT00P4HA2014.0
	15			CDaaT00P4HA2015.0
	16			CDaaT00P4HA2016.0
	17.2			CDaaT00P4HA2017.2
	18			CDaaT00P4HA2018.0
	19			CDaaT00P4HA2019.0
A3	20	39	C2P4HA3000.0	CDaaT00P4HA3020.0
	21.3			CDaaT00P4HA3021.3
	22			CDaaT00P4HA3022.0
	25			CDaaT00P4HA3025.0
	25.4			CDaaT00P4HA3025.4
	26.9			CDaaT00P4HA3026.9
	28			CDaaT00P4HA3028.0
	30			CDaaT00P4HA3030.0
	32			CDaaT00P4HA3032.0
A4	32	65	C2P4HA4000.0	CDaaT00P4HA4032.0
	33.7			CDaaT00P4HA4033.7
	35			CDaaT00P4HA4035.0
	38			CDaaT00P4HA4038.0
	40			CDaaT00P4HA4040.0
	42			CDaaT00P4HA4042.0
	44.5			CDaaT00P4HA4044.5
	48.3			CDaaT00P4HA4048.3
	50.8			CDaaT00P4HA4050.8
	55			CDaaT00P4HA4055.0
	57			CDaaT00P4HA4057.0
A5	57	89	C2P4HA5000.0	CDaaT00P4HA5057.0
	60.3			CDaaT00P4HA5060.3
	63.5			CDaaT00P4HA5063.5
	65			CDaaT00P4HA5065.0
	70			CDaaT00P4HA5070.0
	73			CDaaT00P4HA5073.0
	76.1			CDaaT00P4HA5076.1
A6	80	116	C2P4HA6000.0	CDaaT00P4HA6080.0
	82.5			CDaaT00P4HA6082.5
	88.9			CDaaT00P4HA6088.9
	100			CDaaT00P4HA6100.0
	101.6			CDaaT00P4HA6101.6
A7	108	152	C2P4HA7000.0	CDaaT00P4HA7108.0
	114.3			CDaaT00P4HA7114.3
	127			CDaaT00P4HA7127.0
	133			CDaaT00P4HA7133.0
A8	168.3	175	C2P4HA8000.0	CDaaT00P4HA8168.3
	193.7			CDaaT00P4HA8193.7
	219.1			CDaaT00P4HA8219.1

Gövde Malzemesi / Clamp Body Material	
N	Polyamid / Polyamide
P	Polipropilen / Polypropylene

Elastomer / Elastomer Insert	
T	TPE 60 Shore A
	Termoplastik Elastomer Thermoplastic Elastomer

*** Elastomer Göbek sipariş kodları için sayfa 4'e bakınız.**
* See page 4 for Elastomer Insert order codes.